Inspectron,Inc.
15120 Chippendale Ave
Suite #104
Rosemount, MN 55068

DECK JOIST SIZE & SPACING GUIDE

PERMITS
Permits are required for all decks that are attached to a structure or are 30 inches or more above grade. Decks and platforms not more than 30 inches above adjacent grade and not attached to a structure with frost footing do not require a building permit.

PLAN SUBMITTAL DOCUMENTS
- 2 sets of plans (one will be returned to you with your permit)
- Completed permit application
- Site plan showing location of proposed project and distances from property lines. **(See Site Plan Handout)**

LIST OF INSPECTIONS
- Footing – When forms are set but BEFORE the concrete is poured
- Framing – When all framing, blocking, and bracing are in place and prior to covering the construction so it is accessible for inspection. This inspection MAY be done at the time of final inspection if all parts of the framing are visible and accessible.
- Final – When deck is completed and grading (if any is required) is finished.

GENERAL CODE REQUIREMENTS

- Footings and posts must be sized to support all loads in the existing soil conditions. The base of the footing must be flared to prevent uplift.
- Decks must be designed for a 40 pound per sq ft live load. Decks exposed to the weather must be constructed of approved wood with natural resistance to decay.
- Posts must be of special pressure treated wood approved for ground contact.
- Framing joists and beams must be sized to support all loads imposed.
- Chemical compounds used to treat lumber may be corrosive to the fasteners and connectors. Check to make sure you have fasteners and hangers with the proper coating.
- The maximum rise of stairs is 7 3/4 inches and the minimum run of stairs is 10 inches. Open risers must be designed so that a 4 inch sphere will not pass through. Stairs must have a graspable handrail whenever there are 4 or more risers.
- Guardrails must be 36 inches in height and guardrail openings must be designed so that a 4”inch sphere cannot pass through. **(See Stairway and Handrail Handout)**
- Be careful to maintain the required distance from overhead power lines.

DESIGN/PROJECT NOTES
- Some designs may not be appropriate if a future porch, addition or hot tub is intended to be installed on the deck. Size footings, beams and joists for all future loads.
- Composite decking materials must be approved by the Building Official prior to installation. If you plan on using composite decking materials for the floor or guards provide trade name and copies of the ICC Evaluation Services Report.

If you have questions, contact Inspectron, Inc. at 651-322-6626 or 800-322-6153 Monday through Friday between 8:00 am and 4:30 pm. We are happy to answer your project questions!

Inspectron,Inc.
15120 Chippendale Ave
Suite #104
Rosemount, MN 55068

SAMPLE DECK SECTION

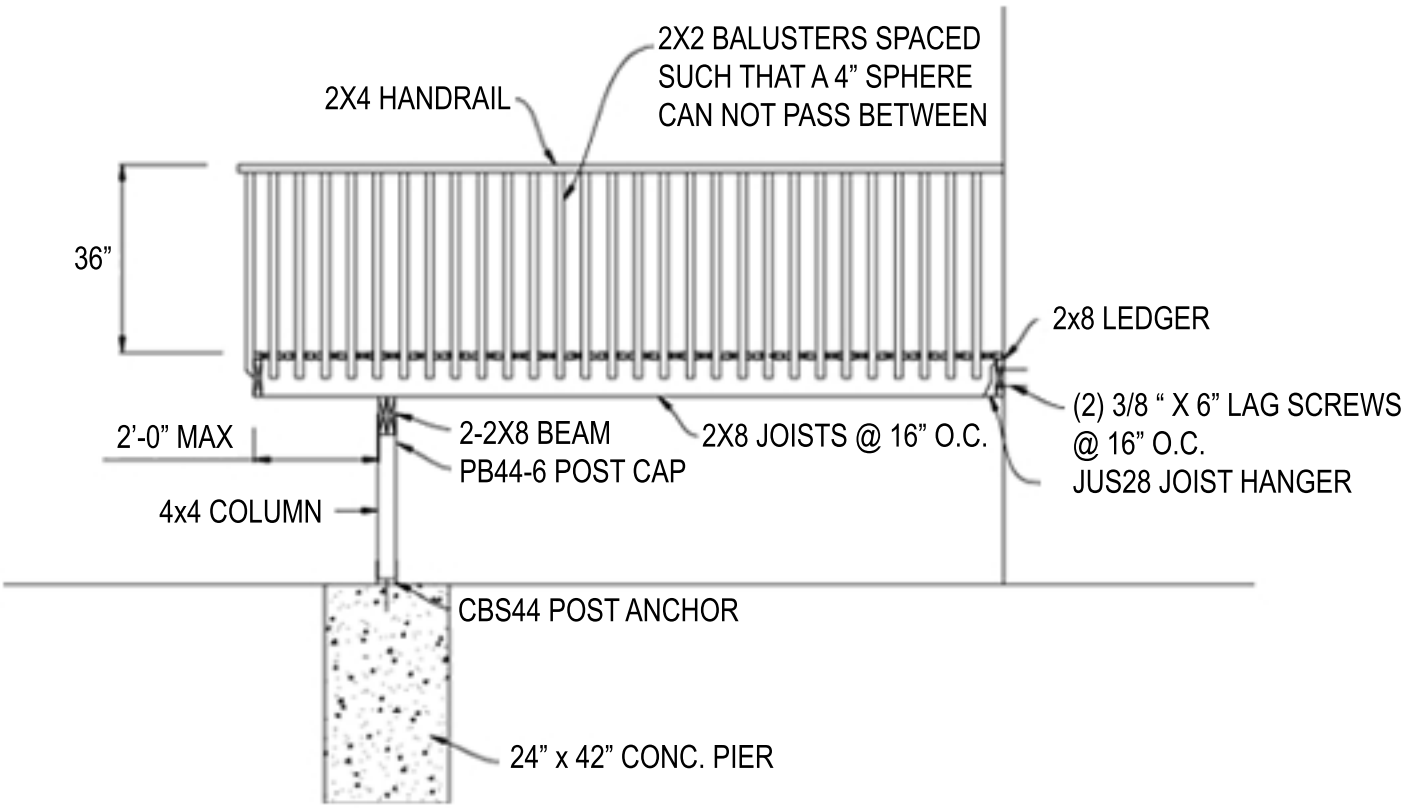

If house floor framing is I-joists or floor trusses contact Inspectron, Inc for requirements of ledger attachment.

ALTERNATE FOOTING DETAIL

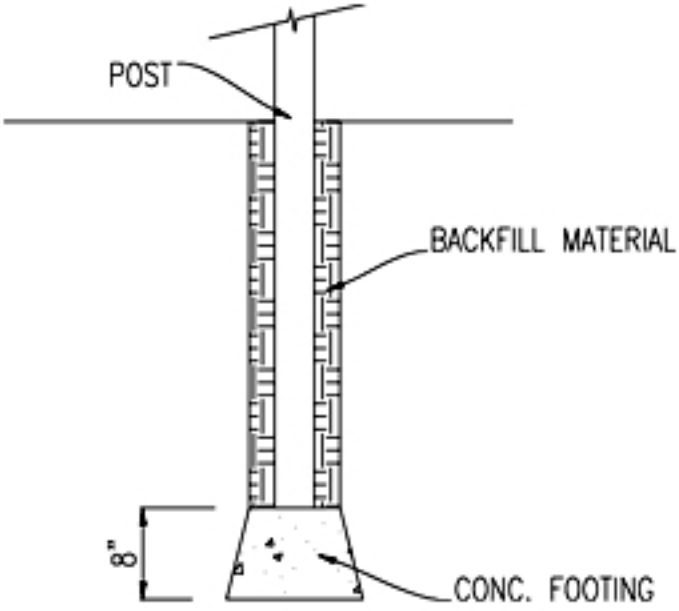

Inspectron,Inc.
15120 Chippendale Ave
Suite #104
Rosemount, MN 55068

DECK PLAN LAYOUT EXAMPLE

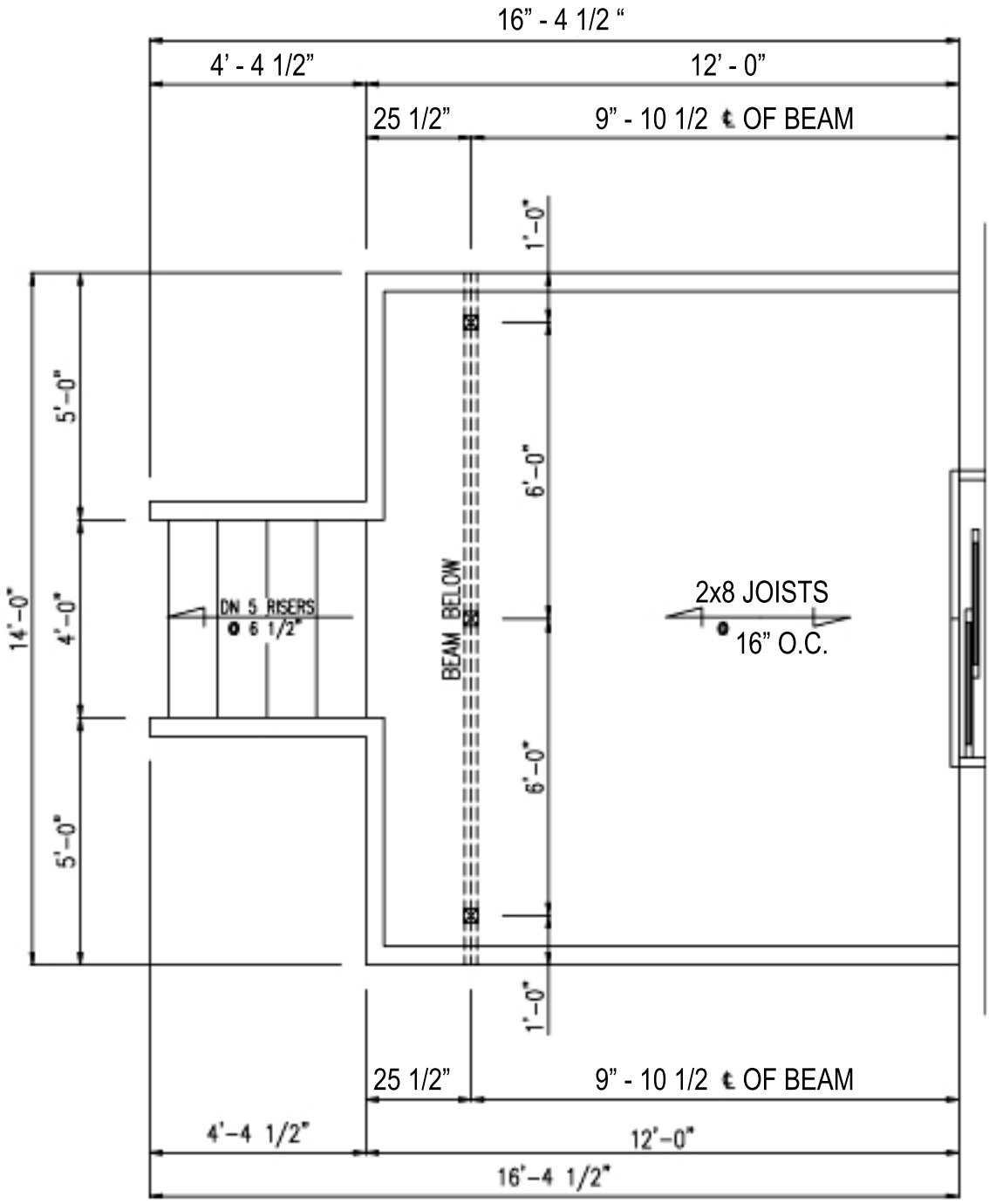

Show locations of any doors or windows adjacent to the deck or stairs.

Inspectron,Inc.
15120 Chippendale Ave
Suite #104
Rosemount, MN 55068

DECK JOINT SIZE & SPACING GUIDE

Based on Number 2 or better wood grades
(Design Load = 40#LL + 10#DL, Deflection = L/360

	Ponderosa Pine			Southern Pine			Western Cedar		
	12" OC	16" OC	24" OC	12" OC	16" OC	24" OC	12" OC	16" OC	24"OC
2 x 6	9-2	8-4	7-0	10-9	9-9	8-6	9-2	8-4	7-3
2 x 8	12-1	10-10	8-10	14-2	12-10	11-0	12-1	11-0	9-2
2 x 10	15-4	13-3	10-10	18-0	16-1	13-5	15-5	13-9	11-3
2 x 12	17-9	15-5	12-7	21-9	19-0	15-4	18-5	16-0	13-0

Inspectron ,Inc.
15120 Chippendale Ave
Suite #104
Rosemount, MN 55068

DECK BEAM & FOOTING SIZE TABLE

Based on No. 2 or better Ponderosa Pine and Southern Pine
(Treated for weather and/or ground exposure)

Joist Length		Post spacing 4'	5'	6'	7'	8'	9'	10'	11'	12'	13'	14'
6'	Southern Pine Beam	1-2x6	1-2x6	1-2x6	2-2x6	2-2x6	2-2x6	2-2x8	2-2x8	2-2x10	2-2x10	2-2x10
	Ponderosa Pine Beam	1-2x6	1-2x6	1-2x8	2-2x8	2-2x8	2-2x8	2-2x10	2-2x10	2-2x12	2-2x12	3-2x10
	Corner Footing	6 5 4	7 6 5	7 6 5	8 7 6	9 7 6	9 7 6	10 8 7	10 8 7	10 9 7	11 9 8	11 9 8
	Intermediate Footing	9 8 7	10 8 7	10 9 7	11 9 8	12 10 9	13 10 9	14 11 10	14 12 10	15 12 10	15 13 11	16 13 11
7'	Southern Pine Beam	1-2x6	1-2x6	1-2x6	2-2x6	2-2x6	2-2x8	2-2x8	2-2x10	2-2x10	2-2x10	2-2x12
	Ponderosa Pine Beam	1-2x6	1-2x6	1-2x8	2-2x8	2-2x8	2-2x10	2-2x10	2-2x10	2-2x12	3-2x10	3-2x10
	Corner Footing	7 5 5	7 6 5	8 7 6	9 7 6	9 8 7	10 8 7	10 8 7	11 9 8	11 9 8	12 10 9	12 10 9
	Intermediate Footing	9 8 7	10 8 7	11 9 8	12 10 9	13 11 9	14 11 10	15 12 10	15 13 11	16 13 11	17 14 12	17 14 12
8'	Southern Pine Beam	1-2x6	1-2x6	2-2x6	2-2x6	2-2x8	2-2x8	2-2x8	2-2x10	2-2x10	2-2x12	2-2x12
	Ponderosa Pine Beam	1-2x6	2-2x6	2-2x8	2-2x8	2-2x8	2-2x10	2-2x10	2-2x10	3-2x10	3-2x10	3-2x12
	Corner Footing	7 6 5	8 6 6	9 7 6	9 8 7	10 8 7	10 8 7	11 9 8	11 9 8	12 10 9	13 10 9	13 11 9
	Intermediate Footing	10 8 7	11 9 8	12 10 9	13 11 9	14 11 10	15 12 10	16 13 11	16 13 12	17 14 12	18 15 13	18 15 13
9'	Southern Pine Beam	1-2x6	1-2x6	2-2x6	2-2x6	2-2x8	2-2x8	2-2x10	2-2x10	2-2x12	2-2x12	3-2x10
	Ponderosa Pine Beam	1-2x6	2-2x6	2-2x8	2-2x8	2-2x10	2-2x10	2-2x10	3-2x10	3-2x10	3-2x12	3-2x12
	Corner Footing	7 6 5	8 7 6	9 7 6	10 8 7	10 9 7	11 9 8	12 10 8	12 10 9	13 10 9	13 11 9	14 11 10
	Intermediate Footing	10 9 7	12 10 8	13 10 9	14 11 10	15 12 10	16 13 11	17 14 12	17 14 12	18 15 13	19 15 13	20 16 14
10'	Southern Pine Beam	1-2x6	1-2x6	2-2x6	2-2x6	2-2x8	2-2x8	2-2x10	2-2x12	2-2x12	3-2x10	3-2x10
	Ponderosa Pine Beam	1-2x6	1-2x6	2-2x8	2-2x8	2-2x10	2-2x10	2-2x12	3-2x10	3-2x12	3-2x12	Eng Bm
	Corner Footing	8 6 6	9 7 6	10 8 7	10 8 7	11 9 8	12 10 8	12 10 9	13 11 9	14 11 10	14 12 10	15 12 10
	Intermediate Footing	11 9 8	12 10 9	14 11 10	15 12 10	16 13 11	17 14 12	17 14 12	18 15 13	19 16 14	20 16 14	21 17 15
11'	Southern Pine Beam	1-2x6	2-2x6	2-2x6	2-2x8	2-2x8	2-2x10	2-2x10	2-2x12	2-2x12	3-2x10	3-2x12
	Ponderosa Pine Beam	2-2x6	2-2x6	2-2x8	2-2x8	2-2x10	2-2x12	2-2x12	3-2x10	3-2x12	3-2x12	Eng Bm
	Corner Footing	8 7 6	9 7 6	10 8 7	11 9 8	12 9 8	12 10 9	13 11 9	14 11 10	14 12 10	15 12 10	15 13 11
	Intermediate Footing	12 9 8	13 11 9	14 12 10	15 12 10	16 13 11	17 14 12	17 14 12	18 15 13	19 16 14	20 16 14	21 17 15
12'	Southern Pine Beam	1-2x6	2-2x6	2-2x6	2-2x8	2-2x8	2-2x10	2-2x10	2-2x12	3-2x10	3-2x10	3-2x12
	Ponderosa Pine Beam	2-2x6	2-2x6	2-2x8	2-2x10	2-2x10	2-2x12	2-2x12	3-2x12	3-2x12	Eng Bm	Eng Bm
	Corner Footing	9 7 6	10 8 7	10 9 7	11 9 8	12 10 9	13 10 9	14 11 10	14 12 10	15 12 10	15 13 11	16 13 11
	Intermediate Footing	12 10 9	14 11 10	15 12 10	16 13 11	17 14 12	18 15 13	19 16 14	20 16 14	21 17 15	22 18 15	23 18 16
13'	Southern Pine Beam	1-2x6	2-2x6	2-2x6	2-2x8	2-2x8	2-2x10	2-2x10	2-2x12	3-2x10	3-2x12	3-2x12
	Ponderosa Pine Beam	2-2x6	2-2x6	2-2x8	2-2x10	2-2x12	2-2x12	2-2x12	3-2x12	3-2x12	Eng Bm	Eng Bm
	Corner Footing	9 7 6	10 8 7	11 9 8	12 10 8	13 10 9	13 11 9	14 12 10	15 12 10	15 13 11	16 13 11	17 14 12
	Intermediate Footing	13 10 9	14 12 10	15 13 11	17 14 12	18 15 13	19 15 13	20 16 14	21 17 15	22 18 15	23 19 16	24 19 17
14'	Southern Pine Beam	1-2x6	2-2x6	2-2x6	2-2x8	2-2x10	2-2x10	2-2x12	3-2x10	3-2x12	3-2x12	3-2x12
	Ponderosa Pine Beam	2-2x6	2-2x8	2-2x8	2-2x10	2-2x12	3-2x10	3-2x12	3-2x12	Eng Bm	Eng Bm	Eng Bm
	Corner Footing	9 8 7	10 8 7	11 9 8	12 10 9	13 11 9	14 11 10	15 12 10	15 13 11	16 13 11	17 14 12	17 14 12
	Intermediate Footing	13 11 9	15 12 10	16 13 11	17 14 12	18 15 13	20 16 14	21 17 15	22 18 15	23 18 16	24 19 17	24 20 17
15'	Southern Pine Beam	2-2x6	2-2x6	2-2x8	2-2x8	2-2x10	2-2x12	2-2x12	3-2x10	3-2x12	3-2x12	Eng Bm
	Ponderosa Pine Beam	2-2x6	2-2x8	2-2x8	2-2x10	3-2x10	3-2x10	3-2x12	3-2x12	Eng Bm	Eng Bm	Eng Bm
	Corner Footing	10 8 7	11 9 8	12 10 8	13 10 9	14 11 10	14 12 10	15 12 11	16 13 11	17 14 12	17 14 12	18 15 13
	Intermediate Footing	14 11 10	15 12 11	17 14 12	18 15 13	19 16 14	20 17 14	21 17 15	22 18 16	23 19 17	24 20 17	25 21 18
16'	Southern Pine Beam	2-2x6	2-2x6	2-2x8	2-2x8	2-2x10	2-2x12	2-2x12	3-2x10	3-2x12	3-2x12	Eng Bm
	Ponderosa Pine Beam	2-2x6	2-2x8	2-2x10	2-2x10	3-2x10	3-2x10	3-2x12	3-2x12	Eng Bm	Eng Bm	Eng Bm
	Corner Footing	10 8 7	11 9 8	12 10 9	13 11 9	14 11 10	15 12 10	16 13 11	16 13 12	17 14 12	18 15 13	18 15 13
	Intermediate Footing	14 11 10	16 13 11	17 14 12	18 15 13	20 16 14	21 17 15	22 18 16	23 19 16	24 20 17	25 21 18	26 21 18

Notes:

1. Joist length is total length of joist, ***including*** any cantilevers.
2. When joist extends (cantilevers) beyond support beam by 18 inches
   or more, add 1 inches to footing dimensions shown.
3. Requirements for future 3-season porches or screen porches:
   a. Increase corner footing size shown by 90%.
   b. Increase center footing size shown by 55%.
   c. Locate all footings at extremities of deck (no cantilevers).
   d. Beam sizes indicated need not be altered.
4. All footing sizes above are base diameters (in inches) and are listed for THREE SOIL TYPES:

	CLAY	SAND	GRAVEL
Corner Footing	10	8	7
Intermediate Footing	14	11	10

Inspectron,Inc.
15120 Chippendale Ave
Suite #104
Rosemount, MN 55068

DECK WORKSHEET

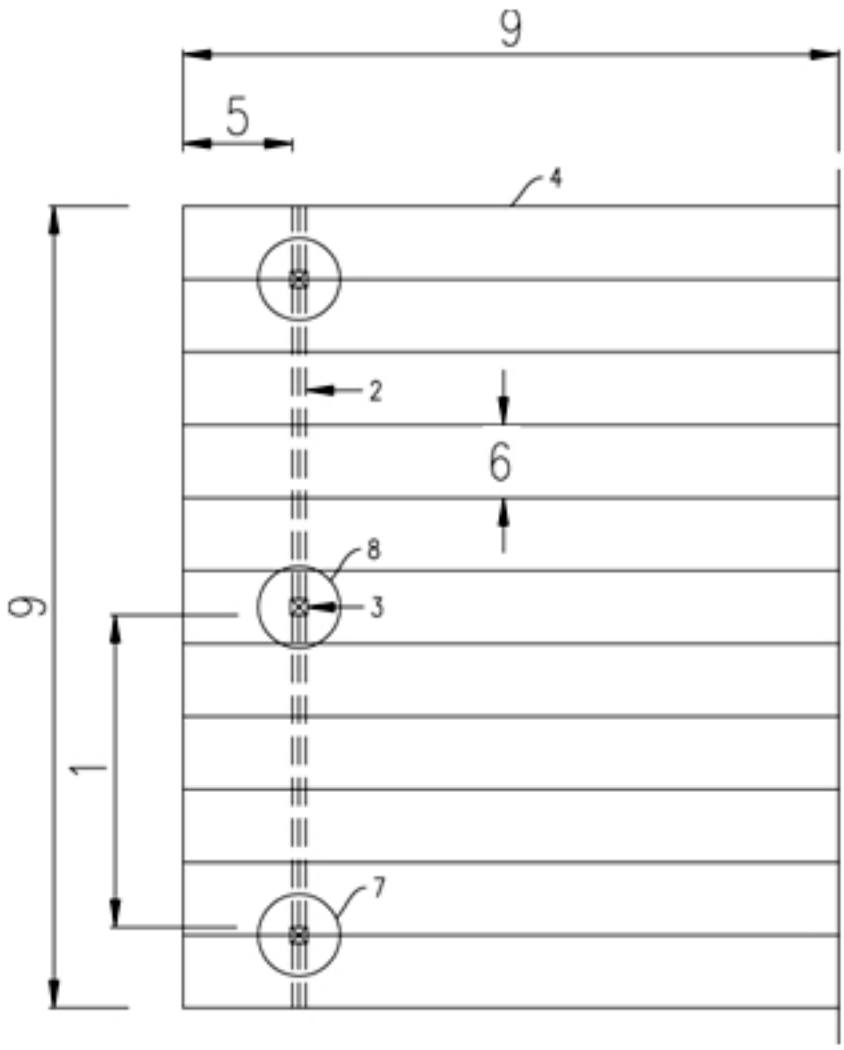

PLEASE FILL IN THE BLANKS

1. Spacing between posts _____
2. Beam size (2 -2x10 etc) _____
3. Post Size (4x4 – 6x6 etc) _____
4. Joist Length & Size _____
5. Joist Overhang (2 ft max) _____
6. Spacing between Joists (12”, 16” O.C.) _____
7. Corner Footing Size _____
8. Intermediate Footing Size _____
9. Overall Deck Size _____

Inspectron,Inc.
15120 Chippendale Ave
Suite #104
Rosemount, MN 55068

DECK SECTION WORKSHEET

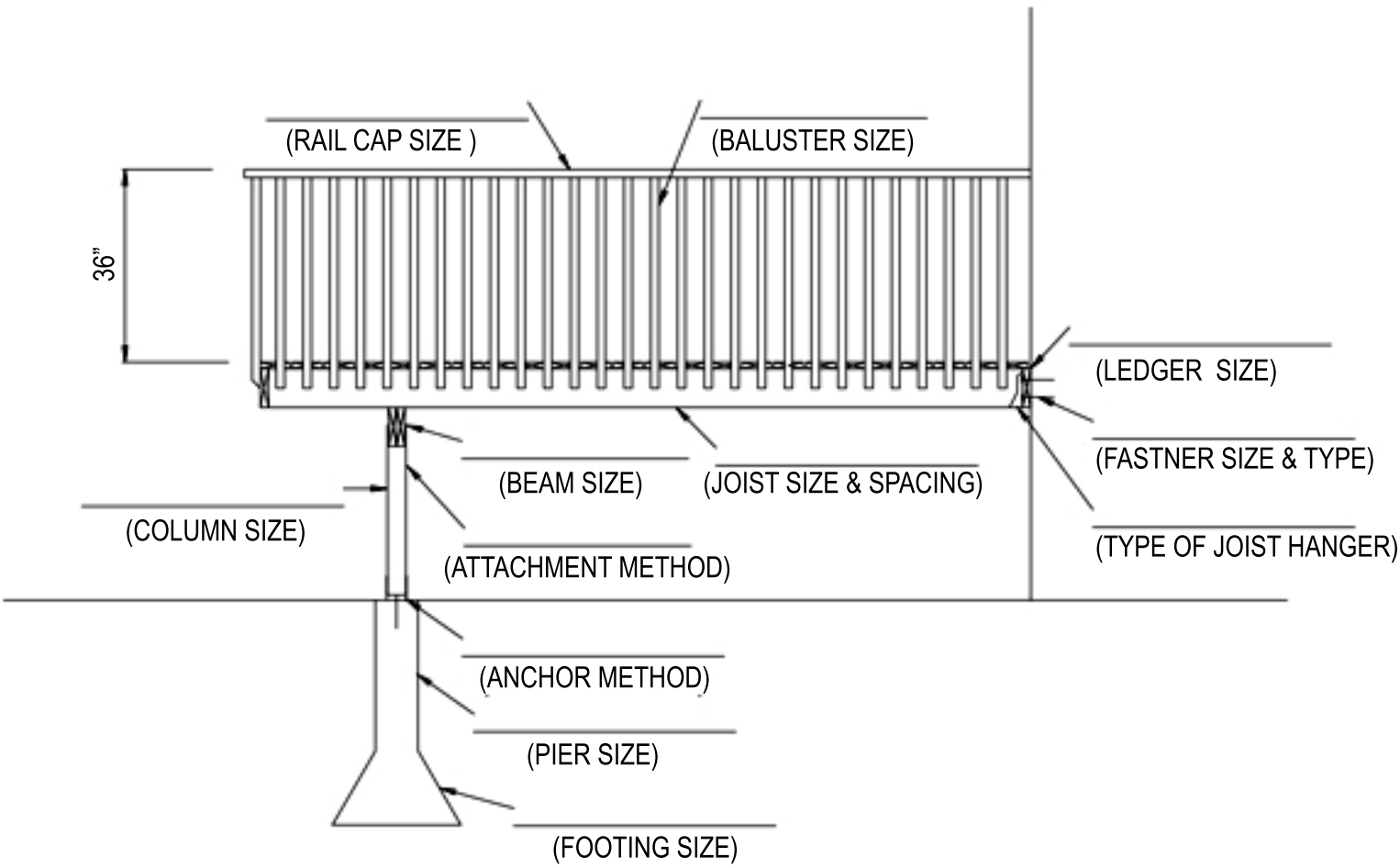

1. **Rail Cap Size** _____
2. **Baluster Size** _____
3. **Ledger Size** _____
4. **Fastener Type and Size** _____
5. **Type of Joist Hanger** _____
6. **Joist Size and Spacing** _____
7. **Beam Size** _____
8. **Attachment Method** _____
9. **Anchor Method** _____
10. **Pier Size** _____
11. **Footing Size** _____

Inspectron,Inc.
15120 Chippendale Ave
Suite #104
Rosemount, MN 55068

BEAM WORKSHEET

SELECT ONE DESIGN OPTION AND COMPLETE

GOOD DESIGN

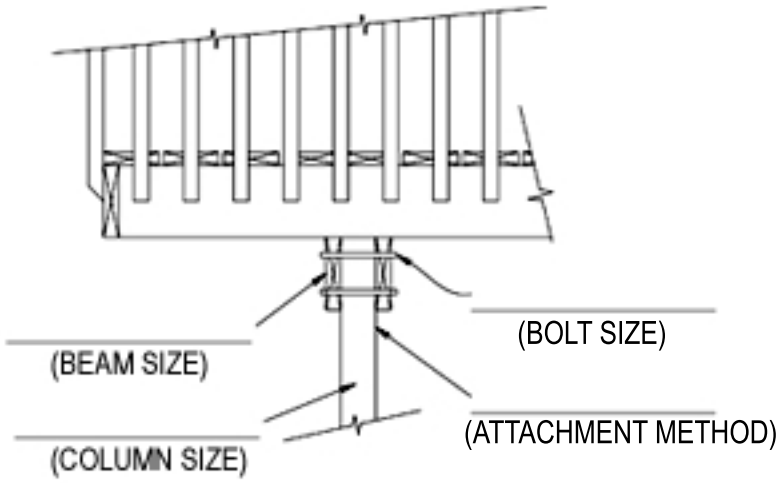

BETTER DESIGN

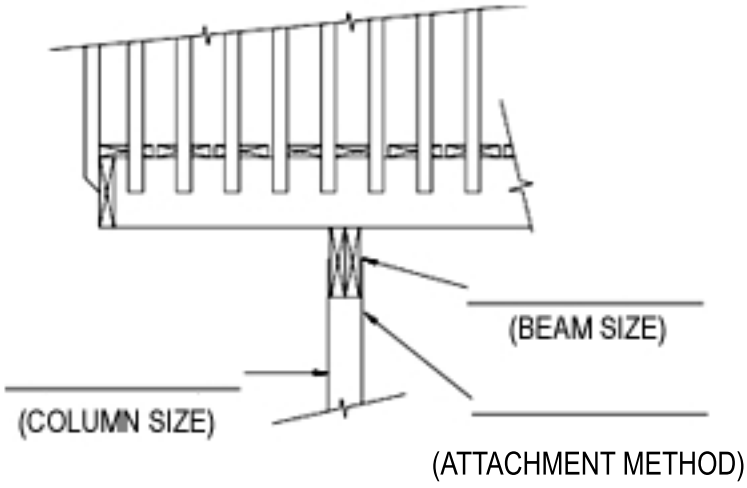

BEST DESIGN

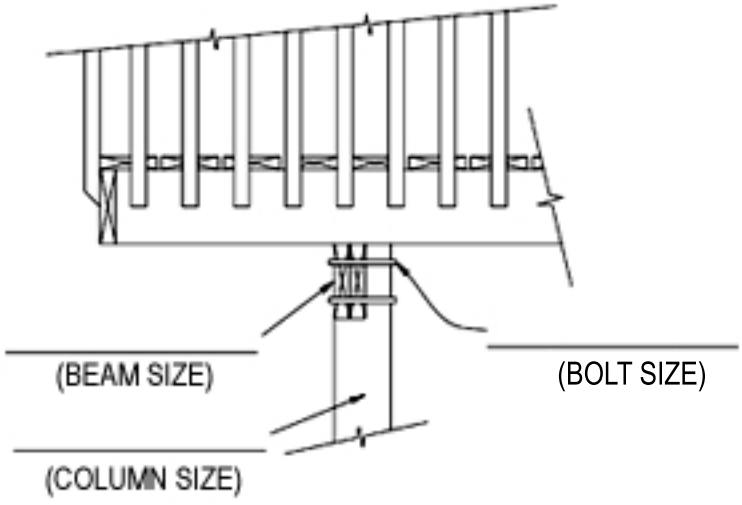

This information is a guide to the most common questions. It is not intended, nor shall it be considered a complete set of requirements.